DO NOT SCALE
DIMENSIONS IN mm

METRIC

THIRD ANGLE PROJECTION

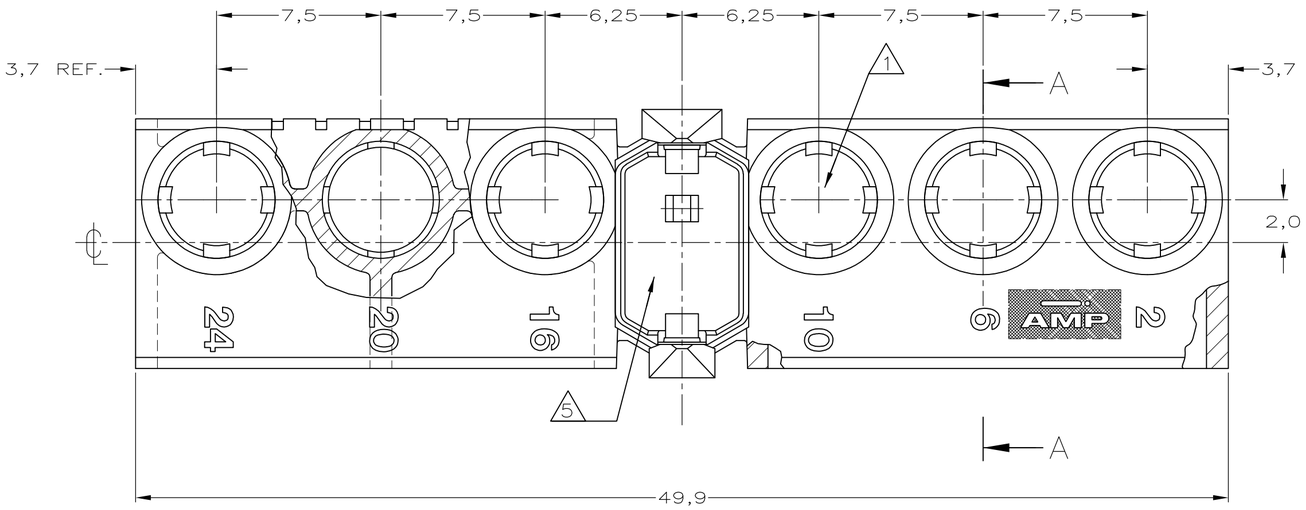

OBSOLETE

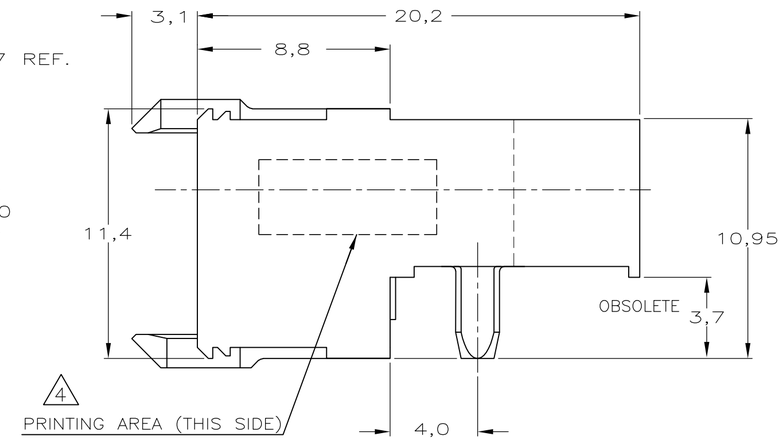

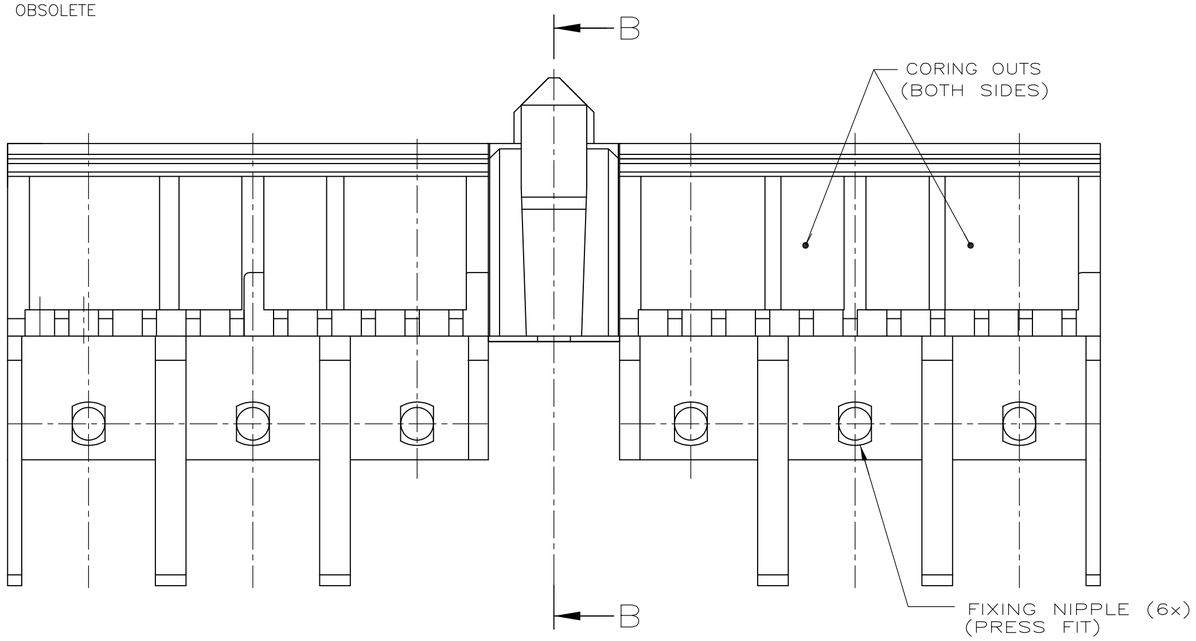

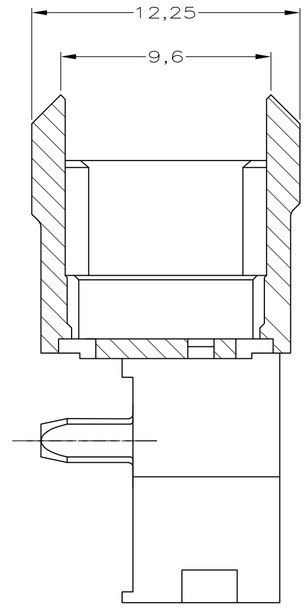

SECTION B–B

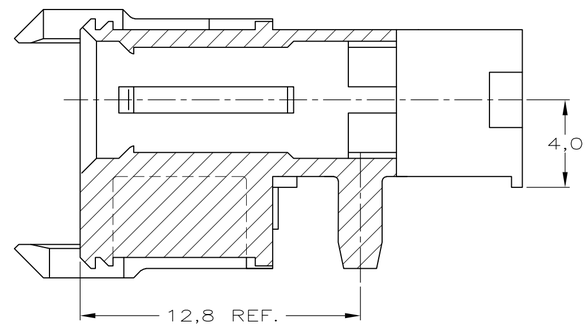

SECTION A–A

PRELIMINARY

NOTES:

1. CONTACT CAVITIES SUITABLE FOR 4,8 DIA. HIGH CURRENT, HIGH FREQUENCY OR FIBRE OPTIC CONTACTS AS PER DIN 41626 (SEE ALSO NOTE 6).
2. MATERIAL HOUSING : GREY GLASSFILLED POLYESTER (PBT).
3. MATERIAL HOUSING : GREY GLASSFILLED POLYMER (PCT).
4. CONNECTOR PRINTED WITH PARTNUMBER AND DATECODE.
5. AREA RESERVED FOR KEYING PART, BASIC P/N 100526.
6. NOT PLATED–THROUGH HOLES (6x).
7. 1,3 DIA. PLATED–THROUGH HOLES (30x) CAN BE OMITTED IF SPECIAL CONTACTS WITH CABLE CONNECTION OR FIBRE OPTIC CONTACTS ARE USED.
8. OBSOLETE PARTS: OBSOLETE CIS STREAMLINING PER D.RENAUD/D.SINISI

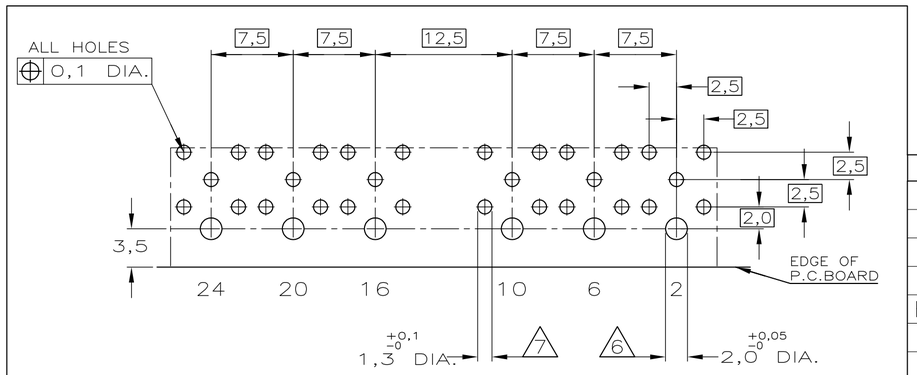

RECOMMENDED PCB–HOLE LAY–OUT
COMPONENT SIDE

8 OBSOLETE	–	3	~~100746–3~~
	–	2	100746–1
	FINISH	MATERIAL	PARTNUMBER

LTR.	REVISION RECORD	DR.	CHK.	DATE
–	–	–	–	–
–	–	–	–	–
–	–	–	–	–
–	–	–	–	–
B1	ECO–09–021826	KK	AEG	06JAN10
B	EH–0720–95	E.D.	B.M.	29–06–95
A	H–9585	B.M.	B.M.	01–10–93

DR.: S.MEEUWSEN DATE: 12 MAR 92
CHK.: B.MOOIJ DATE: 23 MAR 1992
APP.: L.V.SOEST DATE: 13 APR 1992

CUSTOMER DRAWING — FOR REFERENCE ONLY WILL NOT BE UPDATED

© COPYRIGHT 19 93 BY AMP HOLLAND B.V.
ALL INTERNATIONAL RIGHTS RESERVED.AMP PRODUCTS MAY BE COVERED BY U.S. AND FOREIGN AND/OR PATENTS PENDING.
THIS DRAWING IS UNPUBLISHED
~~RELEASED FOR PUBLICATION — ,19~~

AMP HOLLAND B.V.
's–Hertogenbosch,
The Netherlands.

NAME
Z–PACK 2mm HM
TYPE L FEMALE CONNECTOR HOUSING

DWG.No. C–100746 | REV.LTR. B1 | SHEET 1 OF 1 | A2

R6–129 (REV.04–91)