THIS DRAWING IS UNPUBLISHED. RELEASED FOR PUBLICATION -,- .
© COPYRIGHT - By - ALL RIGHTS RESERVED.

LOC	DIST
AD	00

REVISIONS

P	LTR	DESCRIPTION	DATE	DWN	APVD
	H3	P/N 6-102570-9 reactivated	24JUN2015	KJK	PS

1. THE NOTED DIMENSIONS APPLY AT THE INTERSECTION OF THE POST AND HOUSING.
2. POINT OF MEASUREMENT FOR PLATING THICKNESS.
3. OBSOLETE PART NUMBER.
4. FINISH: POSTS: .000015 GOLD IN CONTACT AREA , .000100-.000200 MATTE TIN-LEAD ON SOLDER TAIL, ALL OVER .000050 NICKEL.
5. FINISH: POSTS: .000015 GOLD IN CONTACT AREA , .000100-.000200 MATTE TIN ON SOLDER TAIL ALL OVER .000050 NICKEL.
6. OBSOLETE PARTS: OBSOLETE CIS STREAMLINING PER D.RENAUD/D.SINISI

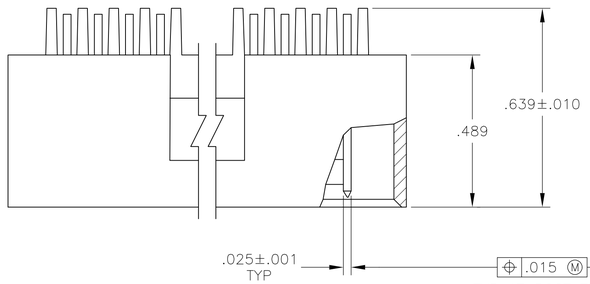

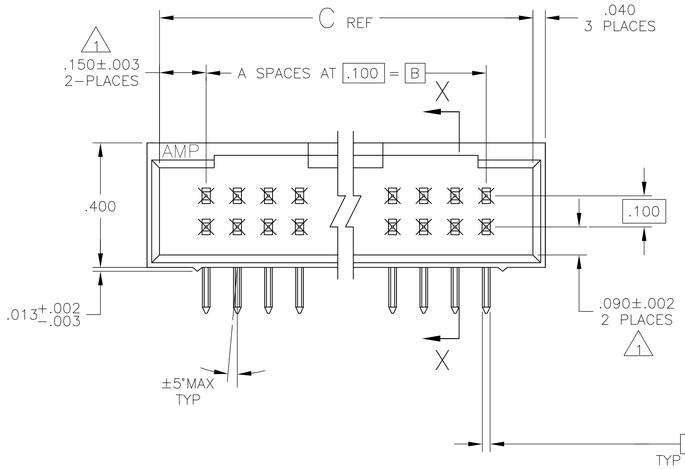

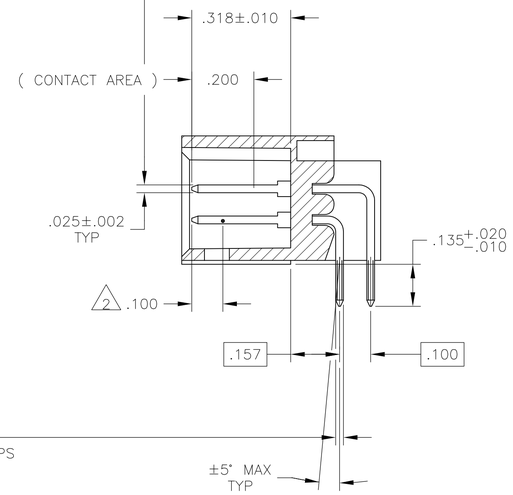

SECTION X-X

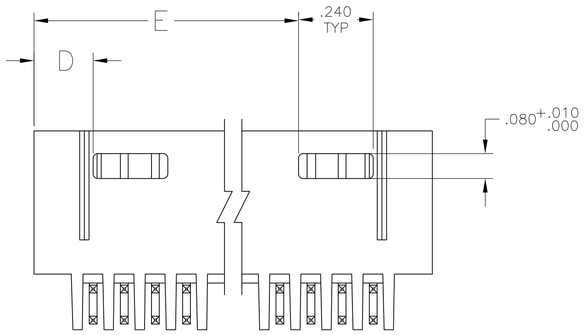

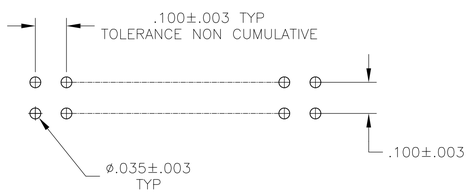

RECOMMENDED HOLE LAYOUT

	5	3.490	.190	3.800	3.500	35	72	~~8-102570-3~~
	5	3.390	.190	3.700	3.400	34	70	~~8-102570-2~~
	5	3.290	.190	3.600	3.300	33	68	~~8-102570-1~~
	5	3.190	.190	3.500	3.200	32	66	~~8-102570-0~~
6	5	3.090	.190	3.400	3.100	31	64	~~7-102570-9~~
OBSOLETE	5	2.990	.190	3.300	3.000	30	62	~~7-102570-8~~
	5	2.890	.190	3.200	2.900	29	60	~~7-102570-7~~
	5	2.790	.190	3.100	2.800	28	58	~~7-102570-6~~
	5	2.690	.190	3.000	2.700	27	56	~~7-102570-5~~
	5	2.590	.190	2.900	2.600	26	54	~~7-102570-4~~
	5	2.490	.190	2.800	2.500	25	52	~~7-102570-3~~
	5	2.390	.190	2.700	2.400	24	50	7-102570-2
OBSOLETE	5	2.290	.190	2.600	2.300	23	48	~~7-102570-1~~
6	5	2.190	.190	2.500	2.200	22	46	~~7-102570-0~~
	5	2.090	.190	2.400	2.100	21	44	6-102570-9
OBSOLETE	5	1.990	.190	2.300	2.000	20	42	~~6-102570-8~~
6	5	1.790	.190	2.100	1.800	18	38	~~6-102570-7~~
	5	1.690	.190	2.000	1.700	17	36	~~6-102570-6~~
	5	1.590	.190	1.900	1.600	16	34	6-102570-5
6	5	1.490	.190	1.800	1.500	15	32	~~6-102570-4~~
OBSOLETE	5	1.390	.190	1.700	1.400	14	30	~~6-102570-3~~
	5	1.290	.190	1.600	1.300	13	28	~~6-102570-2~~
	5	1.190	.190	1.500	1.200	12	26	6-102570-1
	5	1.090	.190	1.400	1.100	11	24	6-102570-0
6 OBSOLETE	5	.990	.190	1.300	1.000	10	22	~~5-102570-9~~
	5	.890	.190	1.200	.900	9	20	5-102570-8
	5	--	.490	1.100	.800	8	18	5-102570-7
	5	--	.390	1.000	.700	7	16	5-102570-6
	5	--	.390	.900	.600	6	14	5-102570-5
	5	--	.290	.800	.500	5	12	5-102570-4
	5	--	.290	.700	.400	4	10	5-102570-3
	5	--	.190	.600	.300	3	8	5-102570-2
	5	1.890	.190	2.200	1.900	19	40	5-102570-1
	4	3.490	.190	3.800	3.500	35	72	~~3-102570-3~~
	4	3.390	.190	3.700	3.400	34	70	~~3-102570-2~~
6	4	3.290	.190	3.600	3.300	33	68	~~3-102570-1~~
OBSOLETE	4	3.190	.190	3.500	3.200	32	66	~~3-102570-0~~
	4	3.090	.190	3.400	3.100	31	64	~~2-102570-9~~
	4	2.990	.190	3.300	3.000	30	62	~~2-102570-8~~
	4	2.890	.190	3.200	2.900	29	60	2-102570-7
	4	2.790	.190	3.100	2.800	28	58	~~2-102570-6~~
6	4	2.690	.190	3.000	2.700	27	56	~~2-102570-5~~
OBSOLETE	4	2.590	.190	2.900	2.600	26	54	~~2-102570-4~~
	4	2.490	.190	2.800	2.500	25	52	~~2-102570-3~~
6 SUP BY 7-102570-2	4	2.390	.190	2.700	2.400	24	50	~~2-102570-2~~
	4	2.290	.190	2.600	2.300	23	48	~~2-102570-1~~
	4	2.190	.190	2.500	2.200	22	46	~~2-102570-0~~
6	4	2.090	.190	2.400	2.100	21	44	~~1-102570-9~~
OBSOLETE	4	1.990	.190	2.300	2.000	20	42	~~1-102570-8~~
	4	1.790	.190	2.100	1.800	18	38	~~1-102570-7~~
	4	1.690	.190	2.000	1.700	17	36	~~1-102570-6~~
	4	1.590	.190	1.900	1.600	16	34	1-102570-5
	4	1.490	.190	1.800	1.500	15	32	1-102570-4
6 OBSOLETE	4	1.390	.190	1.700	1.400	14	30	~~1-102570-3~~
	4	1.290	.190	1.600	1.300	13	28	~~1-102570-2~~
	4	1.190	.190	1.500	1.200	12	26	1-102570-1
	4	1.090	.190	1.400	1.100	11	24	1-102570-0
6 OBSOLETE	4	.990	.190	1.300	1.000	10	22	~~102570-9~~
	4	.890	.190	1.200	.900	9	20	102570-8
	4	--	.490	1.100	.800	8	18	102570-7
	4	--	.390	1.000	.700	7	16	102570-6
	4	--	.390	.900	.600	6	14	102570-5
	4	--	.290	.800	.500	5	12	102570-4
	4	--	.290	.700	.400	4	10	102570-3
	4	--	.190	.600	.300	3	8	102570-2
	4	1.890	.190	2.200	1.900	19	40	102570-1
PLATING	E	D	C	B	A	NO OF POSN	ASSEMBLY PART NUMBER	

THIS DRAWING IS A CONTROLLED DOCUMENT.

DIMENSIONS: INCHES

TOLERANCES UNLESS OTHERWISE SPECIFIED:
0 PLC ± -
1 PLC ± -
2 PLC ± -
3 PLC ± .005
4 PLC ± -
ANGLES ± -

MATERIAL: HOUSING: FLAME RETARDANT THERMOPLASTICS COLOR: BLACK POSTS: PHOS. BRONZE

FINISH: SEE TABLE

DWN H MOLL 25-8-87
CHK L A MAYER 21-8-87
APVD R FEIDT 21-8-87
PRODUCT SPEC —
APPLICATION SPEC —
WEIGHT —

TE Connectivity

NAME: HDR ASSY, MOD II, SHROUDED, .100X.100 C/L 4 SIDES, DBL ROW, RIGHT ANGLE, W/ .025 SQ POSTS

SIZE	CAGE CODE	DRAWING NO	RESTRICTED TO
A1	00779	C-102570	—

CUSTOMER DRAWING | SCALE 4:1 | SHEET 1 OF 1 | REV H3

4805 (3/11)