REV.	DESCRIPTION	DATE
A	NEW DRAWING	6/4/2007
B	added shell cut	1/30/2008

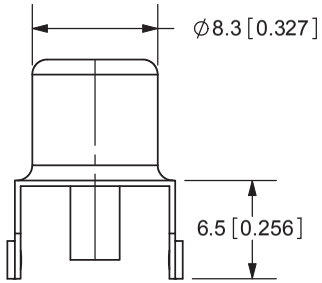

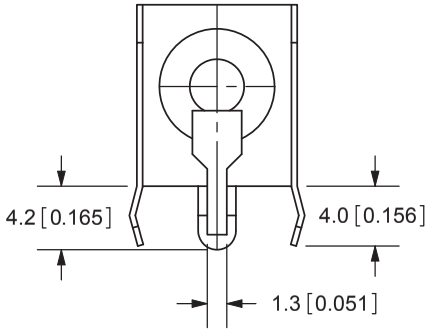

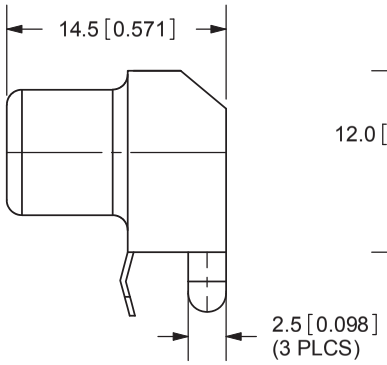

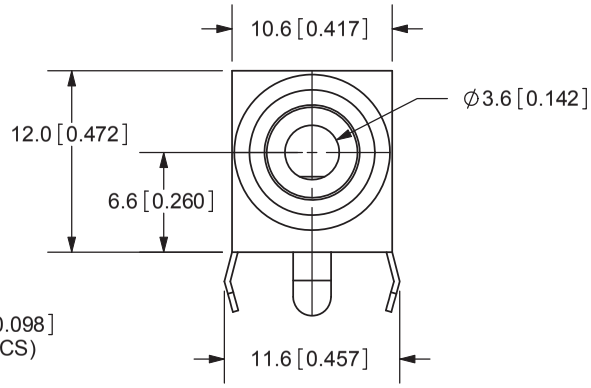

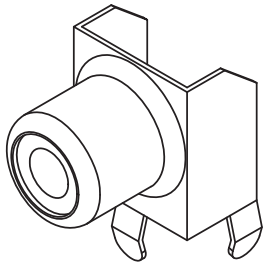

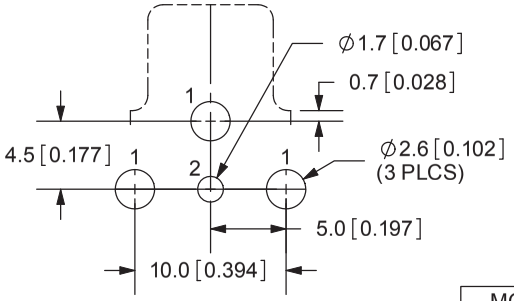

PCB LAYOUT
TOP VIEW

MODEL NO.	RCJ-01X
SCHEMATIC	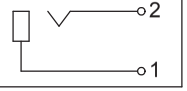

COLOR INDEX	
PART NO.	COLOR
RCJ-011	Black
RCJ-012	Red
RCJ-013	White
RCJ-014	Yellow
RCJ-015	Blue
RCJ-016	Green
RCJ-017	Orange

TOLERANCE:
±0.3mm UNLESS OTHERWISE SPECIFIED

RoHS

CUI INC

20050 SW 112th Ave.
Tualatin, OR 97062
Phone: 503-612-2300
800-275-4899
Fax: 503-612-2383
Website: www.cui.com

SPECIFICATIONS:
CONTACT RESISTANCE: 30m OHMS MAX
INSULATION RESISTANCE: 50M OHMS MIN: 500V DC
VOLTAGE WITHSTAND: 500V AC R.M.S. FOR 1 MINUTE
LIFE: 5,000 CYCLES
OPERATING TEMP: -20° ~ +85°C

	MATERIAL	PLATING
BODY	Steel	Tin
TERMINAL	Brass	Tin
INSULATOR	Bakelite	see color index
INSULATOR	PBT	see color index

TITLE: RCA Jack, Metal, Right Angle, PCB Mount		REV: B
PART NO. RCJ-01X		UNITS: MM [INCHES]
DRAWN BY: ZRJ	APPROVED BY:	SCALE: 2:1

PC FILE NAME: RCJ-01X

COPYRIGHT 2008 BY CUI INC.

For more information, please visit the product page.