| REV. | DESCRIPTION | DATE |
|---|---|---|
| A | NEW DRAWING | 4/11/2006 |
| B | title corrected from right angle to vertical | 5/11/2009 |

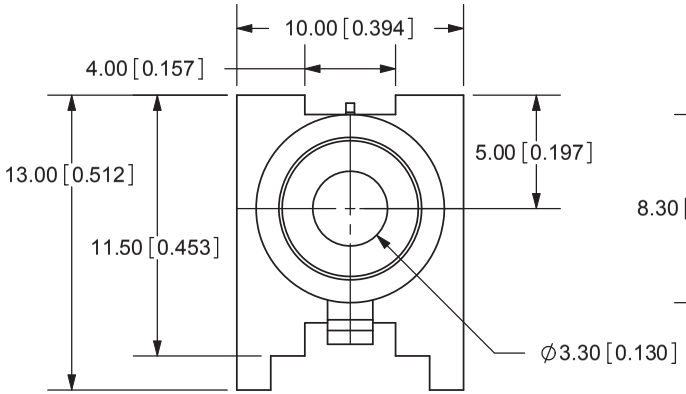


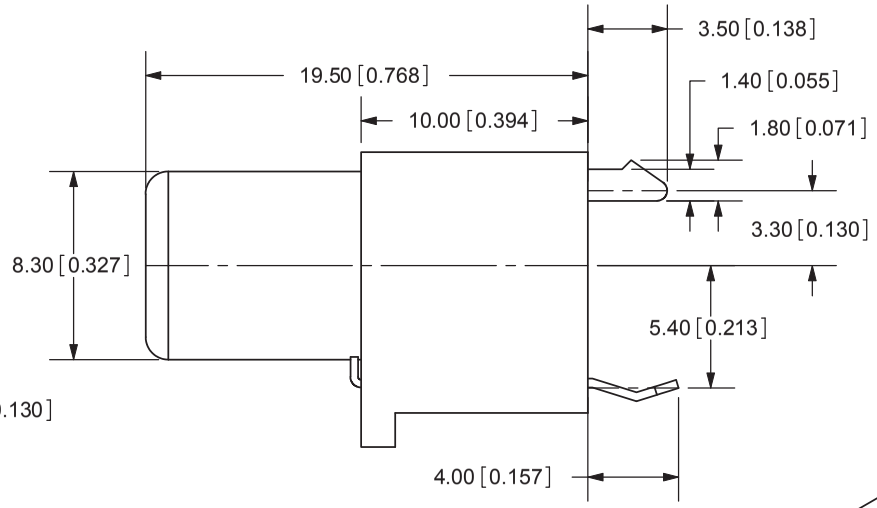


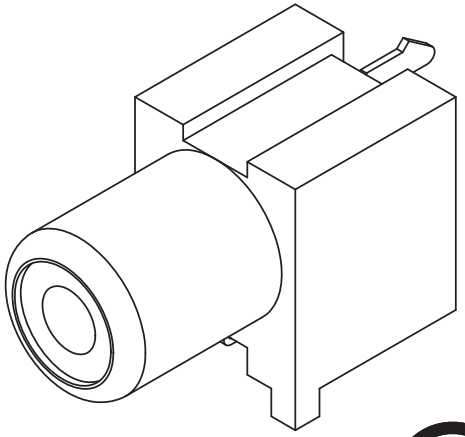

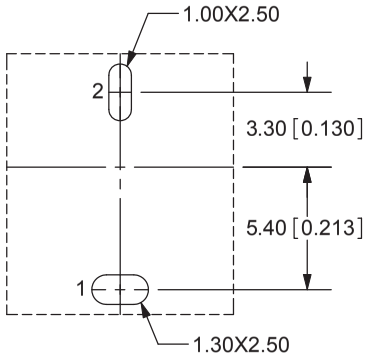


PCB LAYOUT
FRONT VIEW

| MODEL NO. | RCJ-05X |
|---|---|
| SCHEMATIC | 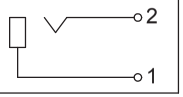 |



TOLERANCE:
±0.3mm UNLESS OTHERWISE SPECIFIED

| COLOR INDEX | |
|---|---|
| PART NO. | COLOR |
| RCJ-051 | Black |
| RCJ-052 | Red |
| RCJ-053 | White |
| RCJ-054 | Yellow |
| RCJ-055 | Blue |
| RCJ-056 | Green |
| RCJ-057 | Orange |


CUI INC
20050 SW 112th Ave.
Tualatin, OR 97062
Phone: 503-612-2300
800-275-4899
Fax: 503-612-2383
Website: www.cui.com


SPECIFICATIONS:
CONTACT RESISTANCE: 30m OHMS MAX
INSULATION RESISTANCE: 100M OHMS MIN: 500V DC
VOLTAGE WITHSTAND: 500V AC R.M.S. FOR 1 MINUTE
LIFE: 5,000 CYCLES
OPERATING TEMP: -20° ~ +85°C

| | MATERIAL | PLATING |
|---|---|---|
| EARTH TERMINAL (1) | Brass | Nickel |
| PIN (2) | Brass | Tin |
| HOUSING | PA66 | |

| | | |
|---|---|---|
| TITLE: RCJ JACK, VERTICAL, PCB MOUNT | | REV: B |
| PART NO. RCJ-05X | | UNITS: MM [INCHES] |
| DRAWN BY: ZRJ | APPROVED BY: | SCALE: 3:1 |

PC FILE NAME: RCJ-05X

COPYRIGHT 2009 BY CUI INC.

For more information, please visit the product page.