Analog, Mixed-Signal and Power Management

MC33663

LIN 2.1 / SAEJ2602-2 Dual LIN Physical Layer

Overview

The local interconnect network (LIN) is a serial communication protocol designed to support automotive networks in conjunction with controller area network (CAN). As the lowest level of a hierarchical network, LIN enables cost-effective communication with sensors and actuators when all the features of CAN are not required.

The 33663 product line integrates two physical layer LIN bus dedicated to automotive LIN sub-bus applications. The MC33663LEF and MC33663SEF devices offer normal baud rate (20 kbps) and the MC33663JEF slow baud rate (10kbps). Both devices integrate fast baud rate (above 100 kbps) for test and programming modes. The 33663 product line offers excellent electromagnetic compatibility (EMC) and radiated emission performance, electrostatic discharge (ESD) robustness and safe behavior, in the event of LIN bus short-to-ground or LIN bus leakage during low-power mode.

MC33663 Simplified Application Diagram

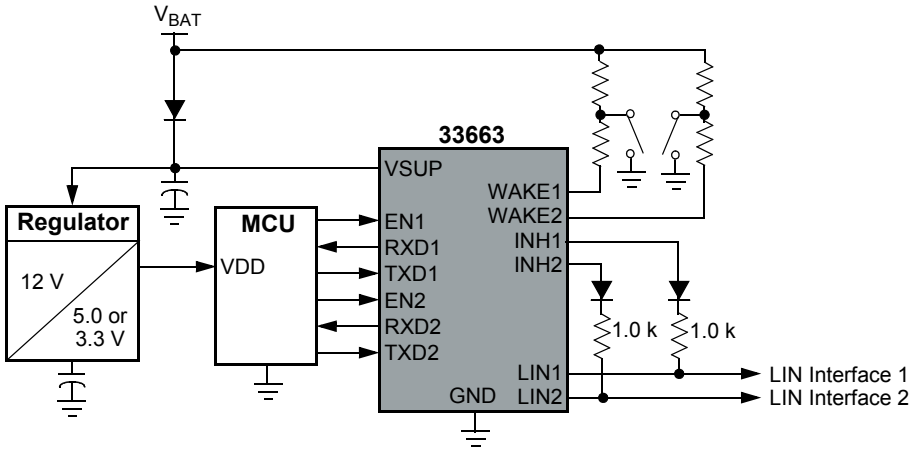

Applications

- Body electronics
  - Body controller & gateways
  - Lighting modules
  - Door/seat module
- Powertrain:
  - Engine management/ Start Stop
  - Battery management systems

Product Features

- Operational from V_{SUP} 7.0 to 18 V DC, functional up to 27 V DC, and handles 40 V during load dump
- Compatible with LIN protocol specification 2.1, and SAEJ2602-2
- Very high immunity against electromagnetic interference
- Low standby current in Sleep mode
- Over-temperature protection
- Permanent dominant state detection
- Fast baud rate mode selection reported by RXD
- Active bus waveshaping offering excellent radiated emission performance
- Sustains ±15.0 kV ESD IEC6100-4-2 on LIN BUS and VSUP pins
- 5.0 and 3.3 V compatible digital inputs without any external components required.

Performance	Typical Values
IEC61000-4-2 on LIN Bus	±15 kV
Ambient Operating Temperature	-40 °C ≤ T_A ≤ +125 °C
Junction Operating Temperature	-40 °C ≤ T_J ≤ +150 °C

Ordering Infomation

Part Number	Temp. Ranges	Maximum Baud Rate	Package
MC33663ALEF	- 40 to + 125 °C	20 kbps	14 SOICN
MC33663ASEF	- 40 to + 125 °C	20 kbps, limits restricted	14 SOICN
MC33663AJEF	- 40 to + 125 °C	10 kbps	14 SOICN

Development Tools

Part Number	Description
KIT33663JEFEVB	MC33663 10 kbps - Evaluation Board
KIT33663LEFEVB	MC33663 20 kbps - Evaluation Board

Documentation

Document Number	Title	Description
MC33663	LIN 2.1 / SAEJ2602-2 Dual LIN Physical Layer	Data Sheet
SG1002	Analog, Mixed Signal and Power Management	Selector Guide
SG187	Automotive	Selector Guide

Protection

Protection	Detect	Shut Down	Auto Retry
Power On Reset	•		•
TXD1 and TXD2 Permanent Dominant	•		•
V_{SUP} Under-voltage	•		•
LIN1, LIN/2 and INH1, INH2 Thermal shutdown	•	•	•

PB-FREE
14-PIN SOICN
98ASB42565B

Learn More: For current information about Freescale products, please visit **www.freescale.com**.

Freescale™ and the Freescale logo are trademarks of Freescale Semiconductor, Inc.
All other product or service names are the property of their respective owners.
© Freescale Semiconductor, Inc., 2012 All rights reserved.

Document Number: MC33663FS, Rev. 2.0