HSOP24: plastic, heatsink small outline package; 24 leads; low stand-off height **SOT566-3**

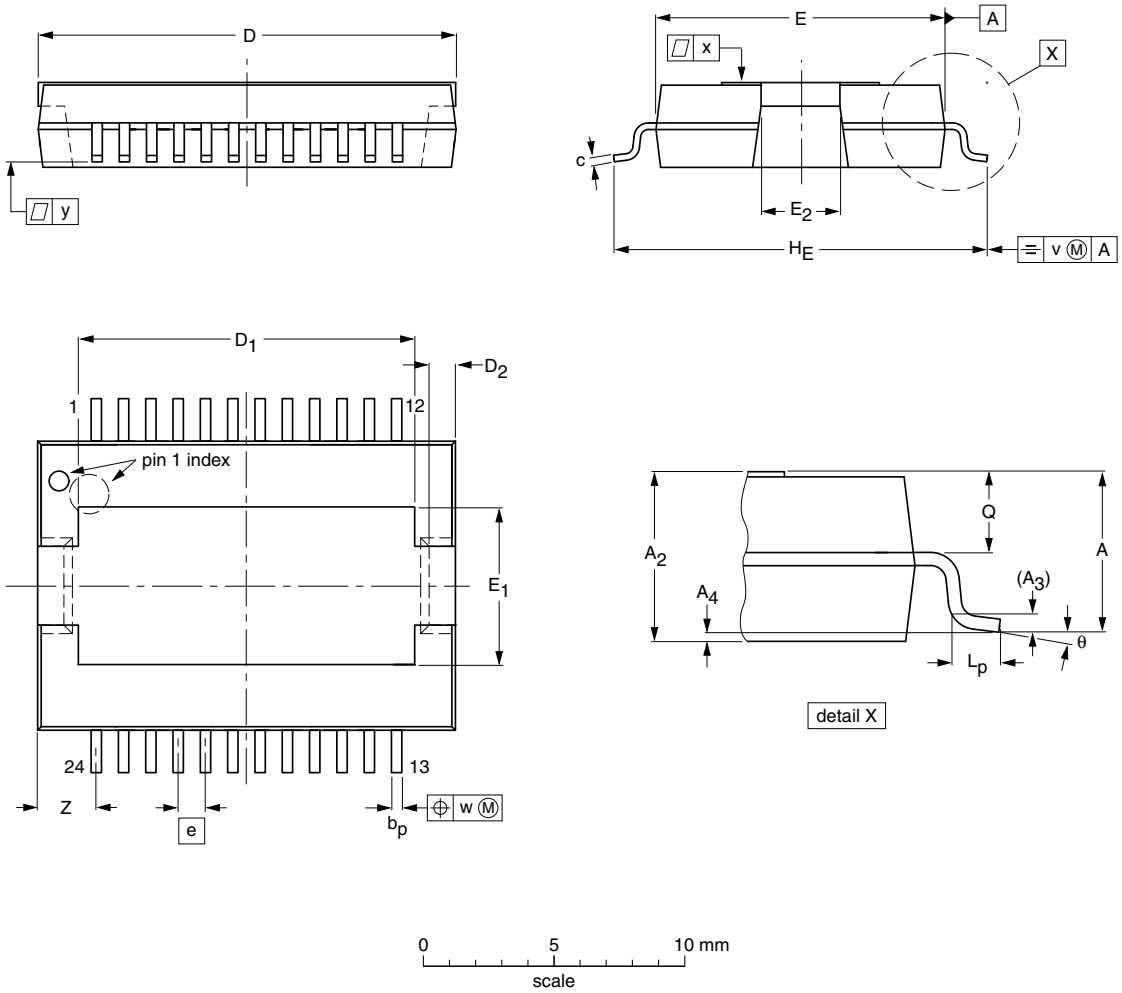

DIMENSIONS (mm are the original dimensions)

UNIT	A max.	A_2	A_3	A_4(1)	b_p	c	D(2)	D_1	D_2	E(2)	E_1	E_2	e	H_E	L_p	Q	v	w	x	y	Z	θ
mm	3.5	3.5 3.2	0.35	+0.08 −0.04	0.53 0.40	0.32 0.23	16.0 15.8	13.0 12.6	1.1 0.9	11.1 10.9	6.2 5.8	2.9 2.5	1	14.5 13.9	1.1 0.8	1.7 1.5	0.25	0.25	0.03	0.07	2.7 2.2	8° 0°

Notes

1. Limits per individual lead.
2. Plastic or metal protrusions of 0.25 mm maximum per side are not included.

OUTLINE VERSION	REFERENCES				EUROPEAN PROJECTION	ISSUE DATE
	IEC	JEDEC	JEITA			
SOT566-3						~~03-02-18~~ 03-07-23

© 2008 NXP B.V.
All rights reserved. Reproduction in whole or in part is prohibited without prior consent of the copyright owner. The information presented in this document does not form part of any quotation or contract, is believed to be accurate and reliable and may be changed without notice. No liability will be accepted by the publisher for any consequence of it's use. Publication thereof does not convey or imply any license under patent- or other industrial or intellectual property rights.

Printed in the Netherlands