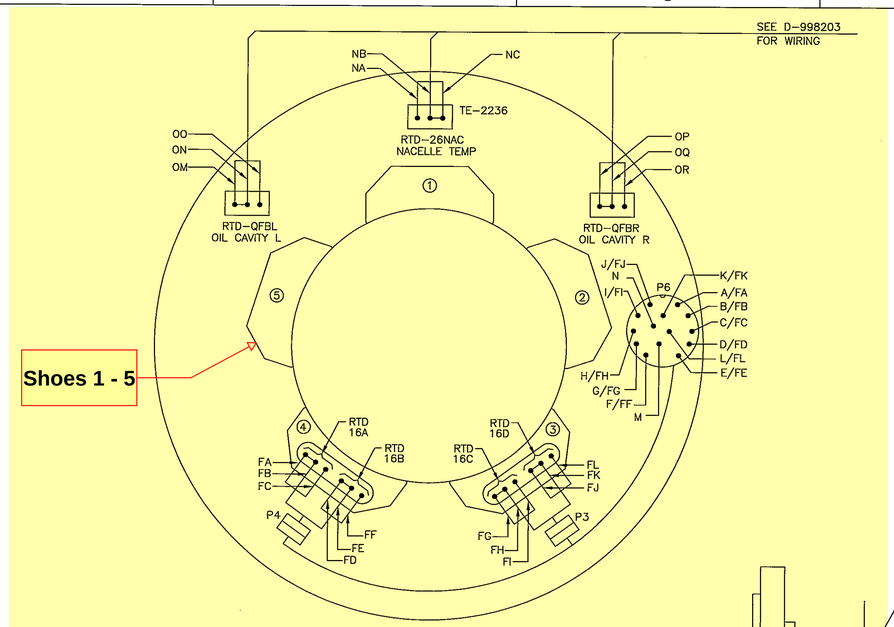

Shoes 1 - 5

FAN BRG RTD & NACELLE TEMP
RTD ARRANGEMENT

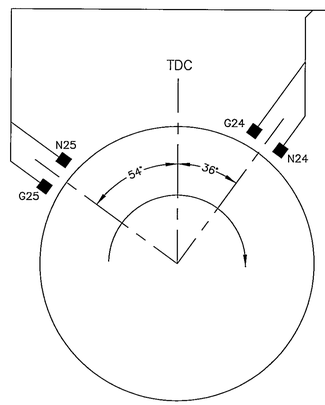

VIBRATION SENSOR ARRANGEMENT
AS VIEWED FROM MOTOR END OF BEARING

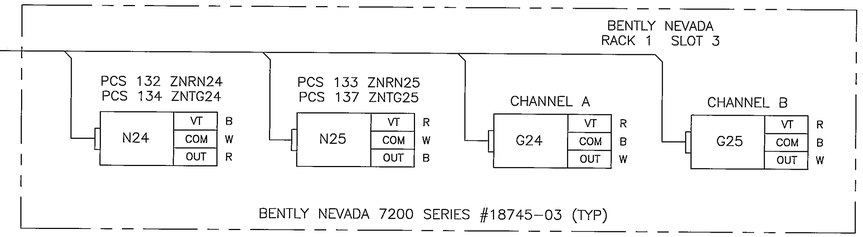

PROXIMITOR JUNCTION BOX
SEE D-998202, SH. 1 AND 2 FOR WIRING

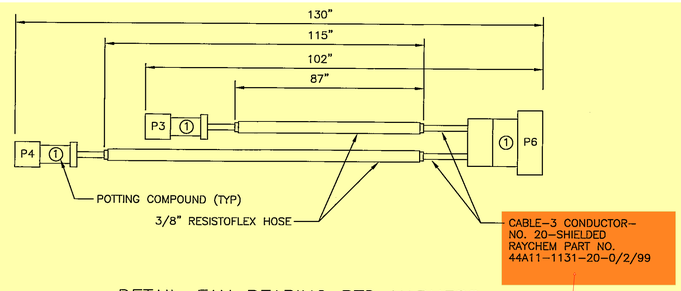

DETAIL-FAN BEARING RTD HARNESS
SEE D-998203 FOR WIRING

44A11-1131-20-0/2/99

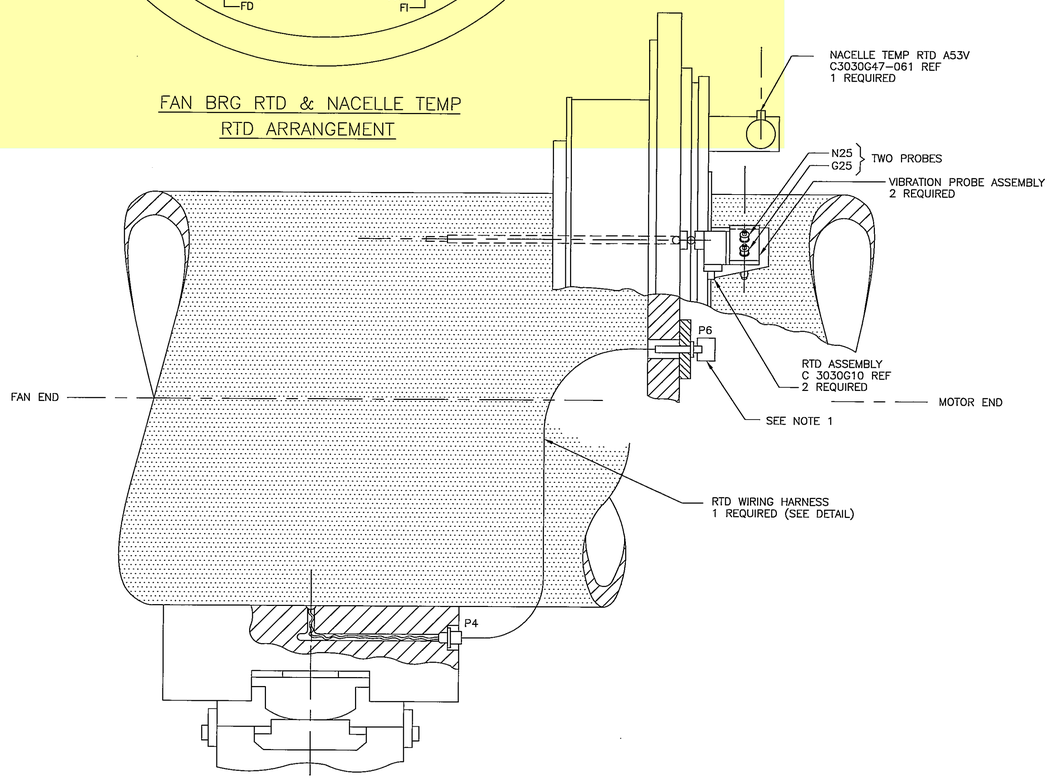

WIRING TABLE

DEVICE	LOCATION	WIRE	COLOR	CONTACTS
RTD-16A	FAN BPG PAD 16-4	FA		J4-A
		FB		J4-B
		FC		J4-C
RTD-16B	FAN BPG PAD 16-4	FD		J4-D
		FE		J4-E
		FF		J4-F
RTD-16C	FAN BPG PAD 16-3	FG		J3-A
		FH		J3-B
		FI		J3-C
RTD-16D	FAN BPG PAD 16-3	FJ		J3-D
		FK		J3-E
		FL		J3-F
RTD-QFBL	FAN BRG OIL CAV L 16	OM	WHITE	
		ON	WHITE	
		OO	RED	
RTD-QFBR	FAN BRG OIL CAV R 16	OP	WHITE	
		OQ	WHITE	
		OR	RED	
RTD-26NAC	FAN BRG UPPER	NA	RED	
		NB	WHITE	
		NC	WHITE	

NOTES:

1. PLUG CONNECTOR CANNON CAT. NO. MS3106A2027P TO FIT RECEPTACLE CANNON CAT. NO. TBFH20-2027PS-200-A95 WITH DAP INSERT CANNON INTERNAL NO. TBFH22948-66.
2. BENTLY NEVADA VIBRATION PROBES PART NOS. :
   N25-21505-08-32-10-02-JANX 406735
   G25-21505-08-32-10-02-JANX 406736
   N24-21505-08-32-10-02-P408256
   G24-21505-08-32-10-02-P447814
   PROXIMITORS - 7200 SERIES #18745-03

FILE
APR 22 2009

FACILITY BASELINE DRAWING
FIELD VERIFIED BY: G. SYDNOR
APPROVED BY: T. POPERNACK JR
LATEST DATE: 5/12/98

CONFIGURATION CONTROLLED
DOCUMENT EC 99

REVISIONS

DATE	LTR	FREQ	DESCRIPTION	BY	CHECK	APPD
3/5/09	F		CNS 99-1048/TTR 504-001-06: UPDATE DWGS 997132,1155741 SHEETS 2 & 6 TO MATCH D-6 DOCUMENT. CHG FLD VER. (JACOBS ENG./FA)	BJR	NV	T6P
12/13/05	E		CNS 99-1005/TTR 504-001-05: UPDATE DRAWINGS 1155816, 997132, & 944971. CHG. FLD. VER. (JACOBS SVERDRUP/FRA)	JB	CDB	VSV
10/28/97	D		REVISED & REDRAWN FROM LE-997132-C. FIELD VERIFIED & INCORPORATED AS CCD. S12-005-96 (CNS 508)	DDH ALW	MRC JMH	TGPJr

Sverdrup
TECHNOLOGY INC.
LANGLEY DIVISION

WORK ORDER NO.

APPROVALS	DATE
DRAFT.	
ENG.	
CHECK	
PROJ. ENG.	
SUPV'N.	

APPROVALS

NAME	ORGANIZATION	DATE		DATE
			DRAWN	
			DESIGNED	
			CHECKED	
			APPROVED	
			TECH. PROJ. ENG.	
			RES. PROJ. ENG.	

TOLERANCE ON DIMENSIONS UNLESS SHOWN OTHERWISE: ANGULAR ±; X.XX (2 DECIMAL PLACES) ±.02; X.XXX (3 DECIMAL PLACES) ±.005
SURFACE FINISH IN MICROINCHES RMS UNLESS SHOWN OTHERWISE √

NATIONAL AERONAUTICS & SPACE ADMINISTRATION
LANGLEY RESEARCH CENTER
HAMPTON, VIRGINIA 23681-0001

PROJECT TITLE: NATIONAL TRANSONIC FACILITY
DRAWING TITLE: INSTRUMENTATION ASSEMBLY FAN BEARING
BUILDING NO. 1236
SIZE D
DRAWING NO. 997132
LATEST REV. F
SHEET NO. 1